地址：江苏省张家港保税区金港路19号
邮编: 215634
直线：0512-56367186
传真：0512-58331196
邮箱：telecom@cai-qin.com

ADD:NO.19# JinGang Road,ZhangjiaGang Free Trade Zone,JiangSu
P.C: 215634
TEL: 0512-56367186
FAX: 0512-58331196
E-mail: telecom@cai-qin.com

更多详细资料请点击
www.cai-qin.com

关注了解企业更多信息

■ 该手册最终解释权归苏州灿勤通讯技术有限公司所有
■ 2017灿勤通讯拥有版权并保留所有权利

C&Q® 灿勤通讯
CAIQIN TELECOM

微 波 元 器 件

系 / 列 / 产 / 品 / 手 / 册

Microwave components SERIES PRODUCT MANUAL

苏州灿勤通讯技术有限公司
SUZHOU CAIQIN TELECOM CO.,LTD.

The company introduces

- 拥有强大的研发能力，尤其在低互调无源器件领域,拥有世界一流的技术和经验， N头产品互调可以达到-160dBc,已经批量生产的产品性能指标与欧美最高性能产品同处一个档次。
- 拥有完全自主的专利十几个
- 拥有多台罗森博格互调仪，CNC加工中心，专业化生产、可靠性检测设备齐全
- 产品全自动化测试，条码管理，产品信息可追溯

- Rich experience and strong capability in developing low PIM passive devices. Our products PIM performance in top one level in over the world. Even N typeconnector products PIM compliance of -160dBc.
- 10+ patents
- Rosenberger PIM testers, network analyzers, CNC machine and
- reliability test lab.
- Automated test system, Barcode management, Traceability of all products.

产品的频率范围覆盖了DC~20GHz，广泛应用于移动通信基站、直放站、点对点通讯、室内覆盖系统、全球卫星定位、导航、卫星电视、卫星广播系统等领域。

公司专注于为客户提供高品质、高性价比产品，并可根据客户的要求定制各种新型、专用产品，始终秉持保持品质、服务至上的原则，从产品的研发设计到生产制造，无时不在致力于为客户提供最佳的解决方案。

The frequency of our products ranges from DC up to 20GHz. Applications include base station, repeater, point to point communication, DAS system, satellite TV, satellite broadcasting system, etc.

We focus on supplying high quality products and best solutions to customers. With our experience and capability in R&D and manufacturing we are always committed to provide the customized solution to meet customer's specific requirements

Product features

To bring high quality RF products to global market and global accounts

Key features of our products

- Wide range of products, including:
  - Passive components (Attenuator/Coupler/Hybrid/Power Combiner/Power Divider)
  - Filters
  - Transmission-Line components(Cable Assembly/Terminator)
  - Customized POI
  - Excellent Passive Inter-Modulation(PIM) Passive components: -160dBc guaranteed, typically -165dBc
  - Filters and POI: -140 TO -160dBc
- 350-6000MHz wide band products
- Various connectors are available: N-Type, DIN-Type, mini-DIN (4.1/9.5) and 4.3/10
- High quality assurance; all products are 100% tested and reports are retrievable from our website.
- Extended warranty available

Product features
Low PIM Couplers

Couplers enable a branch transmission line to couple signal form a main transmission line. C&Q offers airline directional couplers, coaxial couplers and hybrid couplers.

- Excellent passive intermodulation (PIM),-160dBc guaranteed.
- Wideband frequency range:400MHz Tetra, AWS 700MHz, CDMA 800/1900MHz,GSM 900/1800MHz, UMTS, LTE AND WIMAX
- 200 watt average high power rating
- Minimal RF insertion loss
- IP67 for both indoor and outdoor operations
- Coupling value from 3dB to 30dB
- N-type, DIN-type, 4.1/9.5, 4.3/10 connectors are available

Low PIM Power Splitters

Power splitters are RF passive devices used to divide the power travelling in one transmission line equally into few output ports. C&Q offers both Wilkinson power splitters and coaxial splitters.

- Excellent passive intermodulation (PIM), -160dBc guaranteed.
- Wideband frequency range: 400MHz Tetra, AWS 700MHz, CDMA 800/1900MHz, GSM 900/1800MHz, UMTS, LTE AND WIMAX.
- 50 watts to 200 watts average high power rating
- Minimal RF insertion loss
- IP67 for both indoor and outdoor operations
- 2-way, 3-way, 4-way splitters are available
- N-type, DIN-type, 4.1/9.5, 4.3/10 connectors are available

Jumpers and Loads

Jumpers are used to bridge between parts in the system. Loads are connected to the output of a radio transmitter and electrically simulates an antenna. C&Q offers 1/2" rugged cables and all kinds of loads.

- Excellent passive intermodulation(PIM), -160dBc guaranteed.
- Frequency DC-3GHz
- IP67 for both indoor and outdoor operations
- N-type, DIN-type, 4.1/9.5, 4.3/10 connectors are available
- Power range from 2 watts to 150 watts for loads.

CONTENTS

目录 CONTENTS

01-03P Hybrid系列

04-06P Directional Coupler系列

07-12P Load系列

13-18P Splitter

19P Attenuator系列

20-21P Low PIM 50 W Load

Hybrid系列--3 dB Hybrid

C3-327-Nf/ C3-327-Mf

Configuration（外形）

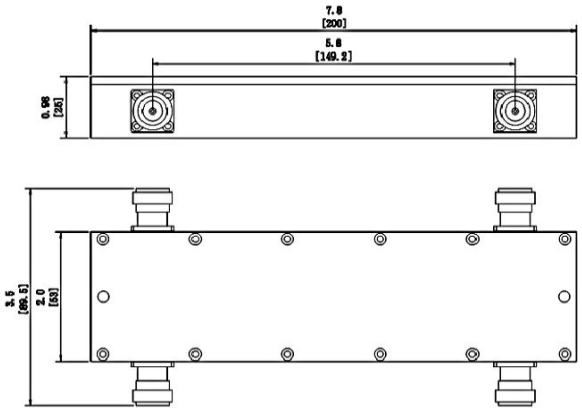

Principal Parameters（主要指标）

Item	Requirement
Operating Frequency	380– 2700 MHz
3rd Order IMD 2X43dBm	– 160dBc
Average Power, maximum	200 W
Coupling	3.0 ±1 dB
Impedance	50 ohm
Isolation	23 dB
VSWR	1.25:1
Environment	IP65
Work temp	-25-65C
Connector	N(f)

Hybrid系列--3 dB Hybrid

C3-727-Nf/C3-727-Df

Configuration（外形）

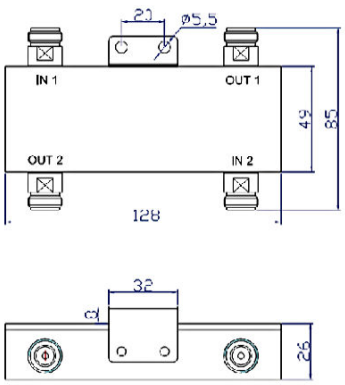

N Type

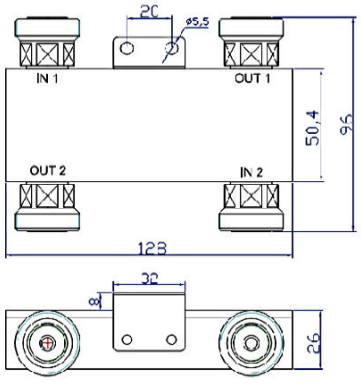

DIN Type

Principal Parameters（主要指标）

Item	Requirement
Operating Frequency	698– 2700 MHz
3rd Order IMD 2X43dBm	– 160dBc
Average Power, maximum	200 W
Coupling	3.1 ±0.5 dB
Impedance	50 ohm
Isolation	25 dB
Return Loss	20.8 dB
Environment	IP65
Work temp	-30-65C
Connector	N(f) or DIN(f)

Hybrid系列--4X4 High power Hybrid Matrix

H4X4-727-Nf / H4X4-727-Df

Configuration（外形）

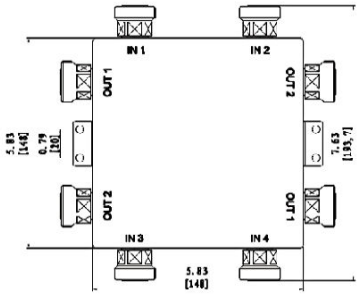

DIN Type

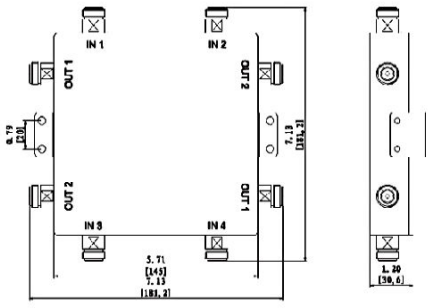

N or MINI DIN Type

Principal Parameters（主要指标）

Item	Requirement
Operating Frequency	698– 2700 MHz
3rd Order IMD 2X43dBm	– 155dBc
Average Power, maximum	100 W
Coupling/Insertion loss	6.1 ±1dB
Impedance	50 ohm
Isolation	25 dB
VSWR	1.2:1
Environment	IP65
Work temp	-40-75℃
Connector	DIN(f) , N(f), 4.3/10(f)
Finish	Black paint

Directional Coupler系列

Directional Coupler (380-2700MHz)

Configuration（外形）

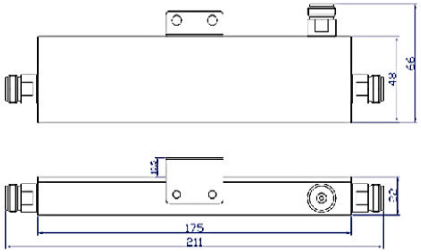

N Type

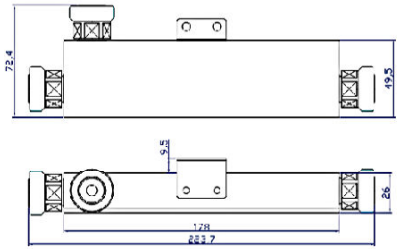

DIN Type

Principal Parameters（主要指标）

Part No.	C6-327-Nf C6-327-Df	C10-327-Nf C10-327-Df	C15-327-Nf C15-327-Df	C20-327-Nf C20-327-Df	C30-327-Nf C30-327-Df
	6dB	10dB	15dB	20dB	30dB
Frequency	380– 2700	380– 2700	380– 2700	380– 2700	380– 2700
Coupling	6±1.0 dB	10±1.2 dB	15±1.2 dB	20±1.2 dB	30±1.5 dB
3rd Order IMD 2X43dBm	– 160dBc	– 160dBc	– 160dBc	– 160dBc	– 160dBc
Average Power	200 W	200 W	200 W	200 W	200 W
Peak Power	1000 W	1000 W	1000 W	1000 W	1000 W
Insertion Loss	1.8 dB	0.8 dB	0.5 dB	0.3dB	0.3 dB
Impedance	50 ohm	50 ohm	50 ohm	50 ohm	50 ohm
Isolation	26 dB	30 dB	35 dB	40 dB	50 dB
Return Loss	19 dB	19 dB	19 dB	19 dB	19 dB
VSWR	1.25:1	1.25:1	1.25:1	1.25:1	1.25:1
Environment	IP65	IP65	IP65	IP65	IP65
Work temp	-25-65℃	-25-65℃	-25-65℃	-25-65℃	-25-65℃
Connector	N(f), DIN(f)	N(f), DIN(f)	N(f), DIN(f)	N(f), DIN(f)	N(f), DIN(f)

Directional Coupler系列

Directional Coupler (700-2700MHz)

Principal Parameters (主要指标)

Part Number	5dB	6dB	7dB	8dB	10dB
	C5-727-Nf C5-727-Df	C6-727-Nf C6-727-Df	C7-727-Nf C7-727-Df	C8-727-Nf C8-727-Df	C10-727-Nf C10-727-Df
Frequency	698– 2700	698– 2700	698– 2700	698– 2700	698– 2700
3rd Order IMD 2X43dBm	– 160dBc	– 160dBc	– 160dBc	– 160dBc	– 160dBc
Average Power	150 W	200 W	200 W	200 W	200 W
Coupling	5±0.8 dB	6±1.0 dB	7±1.0 dB	8±1.0 dB	10±1.0 dB
Peak Power	1000 W	1000 W	1000 W	1000 W	1500 W
Insertion Loss	2.0 dB	1.6 dB	1.4 dB	1.1 dB	0.7 dB
Impedance	50 ohm	50 ohm	50 ohm	50 ohm	50 ohm
Isolation	25 dB	26 dB	27 dB	28 dB	30 dB
Return Loss	20.8 dB	20.8 dB	20.8 dB	20.8 dB	20.8 dB
VSWR	1.2:1	1.2:1	1.2:1	1.2:1	1.2:1
Environment	IP65	IP65	IP65	IP65	IP65
Work temp	-40-75℃	-40-75℃	-40-75℃	-40-75℃	-40-75℃
Weight	370g N(f) 560g DIN(f)	370g N(f) 560g DIN(f)	370g N(f) 560g DIN(f)	370g N(f) 560g DIN(f)	370g N(f) 560g DIN(f)
Connector	N(f), DIN(f)	N(f), DIN(f)	N(f), DIN(f)	N(f), DIN(f)	N(f), DIN(f)

Directional Coupler系列

Directional Coupler (700-2700MHz)

Configuration (外形)

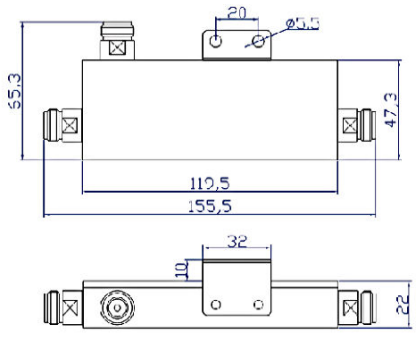

DIN Type

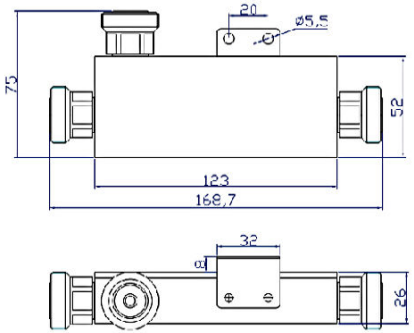

N or MINI DIN Type

Principal Parameters (主要指标)

Part Number	13dB	15dB	20dB	30dB
	C13-727-Nf C13-727-Df	C15-727-Nf C15-727-Df	C20-727-Nf C20-727-Df	C30-727-Nf C30-727-Df
Frequency	698– 2700	698– 2700	698– 2700	698– 2700
3rd Order IMD 2X43dBm	– 160dBc	– 160dBc	– 160dBc	– 160dBc
Average Power	300 W	300 W	300 W	300 W
Coupling	13±1.0 dB	15±1.0 dB	20±1.0 dB	30±1.2 dB
Peak Power	1500 W	1500 W	2000 W	2000 W
Insertion Loss	0.5 dB	0.4 dB	0.2dB	0.2 dB
Impedance	50 ohm	50 ohm	50 ohm	50 ohm
Isolation	33dB	35 dB	40dB	50dB
Return Loss	20.8 dB	20.8 dB	20.8 dB	20.8 dB
VSWR	1.2:1	1.2:1	1.2:1	1.2:1
Environment	IP65	IP65	IP65	IP65
Work temp	-40-75℃	-40-75℃	-40-75℃	-40-75℃
Weight	370g N(f) 560g DIN(f)	370g N(f) 560g DIN(f)	370g N(f) 560g DIN(f)	370g N(f) 560g DIN(f)
Connector	N(f), DIN(f)	N(f), DIN(f)	N(f), DIN(f)	N(f), DIN(f)

Load系列

2W Load

Configuration（外形）

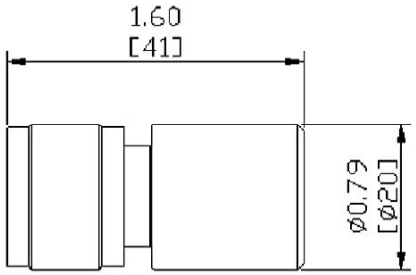

NM

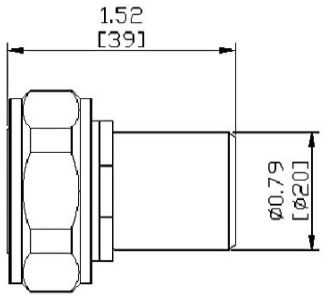

DM

Principal Parameters（主要指标）

Item	Requirement
Operating Frequency	DC– 3 GHz
Average Power, maximum	2 W
Impedance	50 ohm
Return Loss, minimum	23 dB
Environment	IP65
Work temp	-40-75℃
Connector	N(m)/ DIN(m)

Load系列

10W Load

Principal Parameters（主要指标）

Item	Requirement
Operating Frequency	DC– 3 GHz
Average Power, maximum	10 W
Impedance	50 ohm
Return Loss, minimum	22 dB
Environment	IP65
Work temp	-40-75℃
Connector	N(f)/N(m)/DIN(f)/ DIN(m)

Configuration（外形）

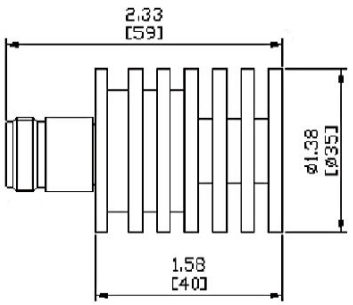

NF

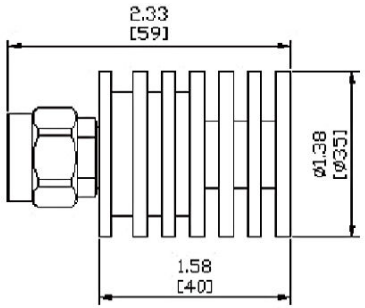

NM

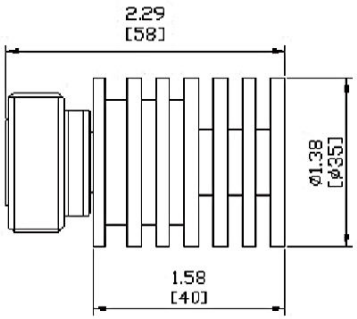

DF

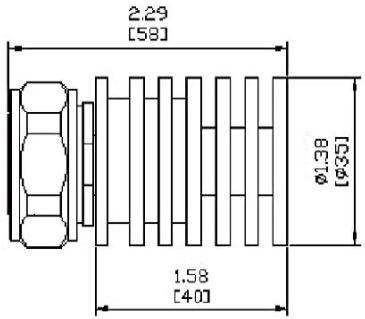

DM

Load系列

30W Load

Principal Parameters（主要指标）

Item	Requirement
Operating Frequency	DC– 3 GHz
Average Power, maximum	30 W
Impedance	50 ohm
Return Loss, minimum	22dB
Environment	IP65
Work temp	-40-75℃
Connector	N(f)/N(m)/DIN(f)/DIN(m)

Configuration（外形）

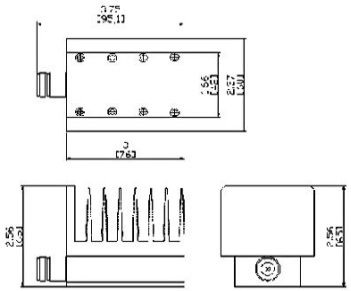

NF

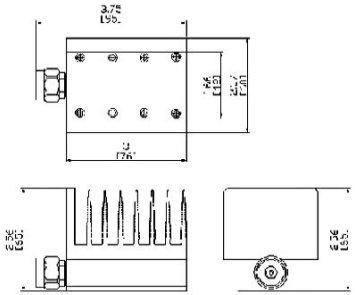

NM

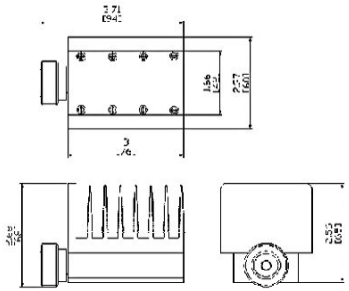

DF

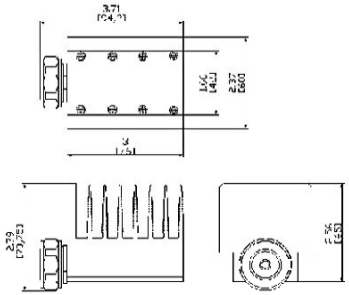

DM

Load系列

50W Load(T-50-Dm)

Principal Parameters（主要指标）

Item	Requirement
Operating Frequency	DC– 3 GHz
Average Power, maximum	50 W
Impedance	50 ohm
Return Loss, minimum	22 dB
Environment	IP65
Work temp	-40-75℃
Connector	N(f)/N(m)/DIN(f)/DIN(m)

Configuration（外形）

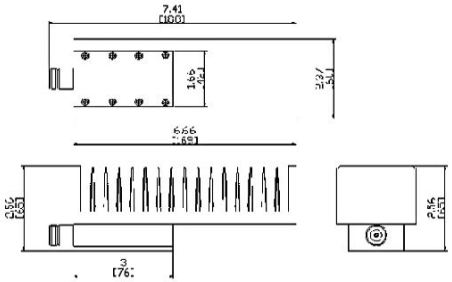

NF

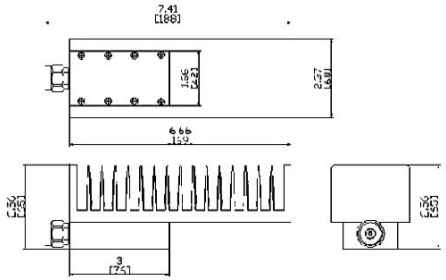

NM

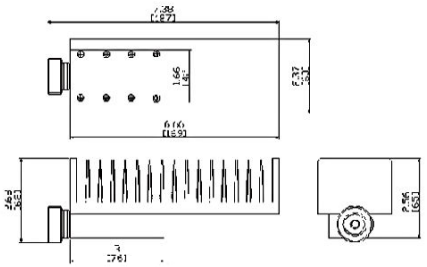

DF

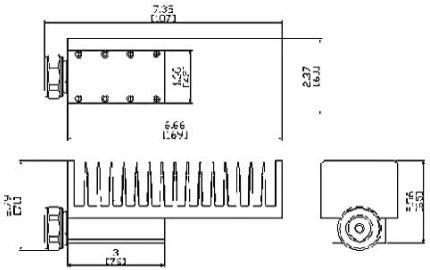

DM

Load系列

100W Load (T-100-Dm)

Principal Parameters（主要指标）

Item	Requirement
Operating Frequency	DC– 3 GHz
Average Power, maximum	100 W
Impedance	50 ohm
Return Loss, minimum	23 dB
Environment	IP65
Work temp	-40-75℃
Connector	N(f)/N(m)/DIN(f)/DIN(m)

Configuration（外形）

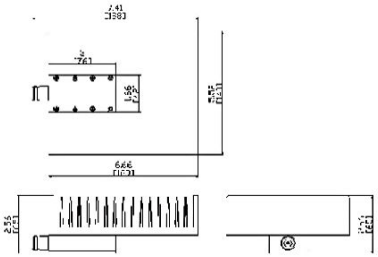

NF

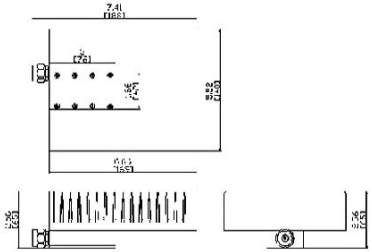

NM

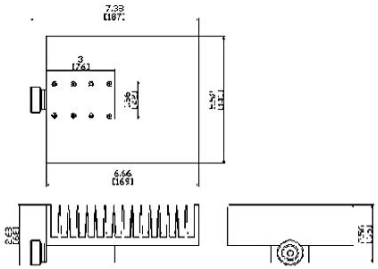

DF

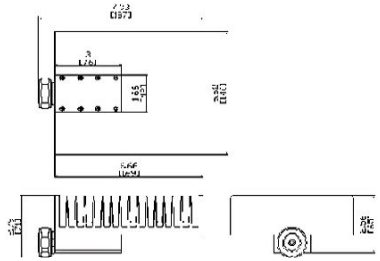

DM

Load系列

150W Load(T-50-Dm)

Principal Parameters（主要指标）

Item	Requirement
Operating Frequency	DC– 3 GHz
Average Power, maximum	150 W
Impedance	50 ohm
Return Loss, minimum	23 dB
Environment	IP65
Work temp	-40-75℃
Connector	N(f)/N(m)/DIN(f)/DIN(m)

Configuration（外形）

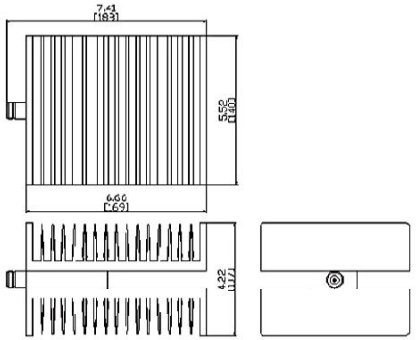

NF

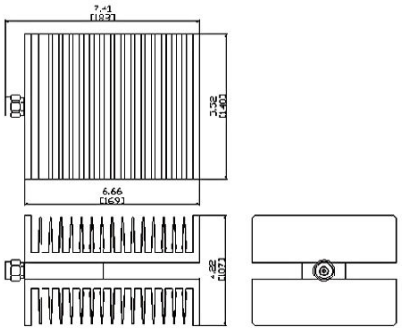

NM

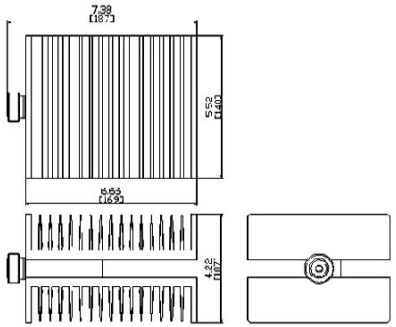

DF

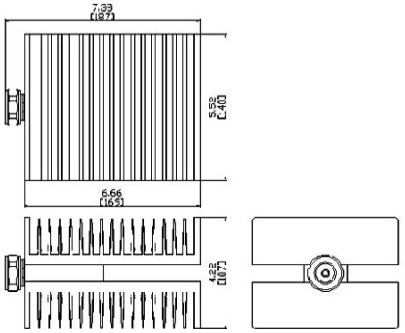

DM

High power Splitter

380-2700MHz

Principal Parameters (主要指标)

Part Number	2 Way	3 Way	4 Way
	SH2-327-Nf SH2-327-Df	SH3-327-Nf SH3-327-Df	SH4-327-Nf SH4-327-Df
Frequency	380 – 2700 MHz	380 – 2700 MHz	380 – 2700 MHz
3rd Order IMD 2X43dBm	– 160dBc	– 160dBc	– 160dBc
Average Power, max	300 W	300 W	300 W
Impedance	50 ohm	50 ohm	50 ohm
Insertion Loss	0.2 dB	0.3 dB	0.3 dB
VSWR	1.2:1	1.2:1	1.2:1
Split Loss	3.0 dB	4.8 dB	6.0 dB
Environment	IP65	IP65	IP65
Work temp	-40-75C	-40-75C	-40-75C
Connector	N(f), DIN(f),	N(f), DIN(f),	N(f), DIN(f),

High power Splitter

380-2700MHz

Configuration（外形）

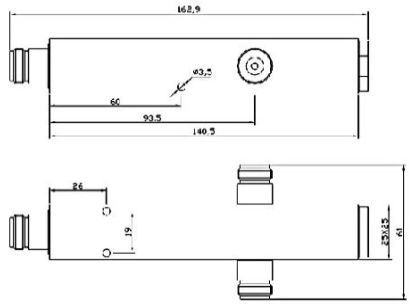

2W N Type

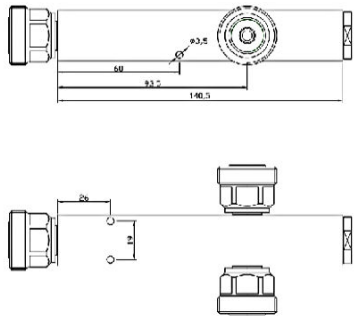

2W DIN Type

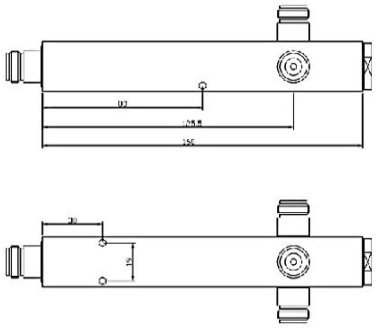

3W N Type

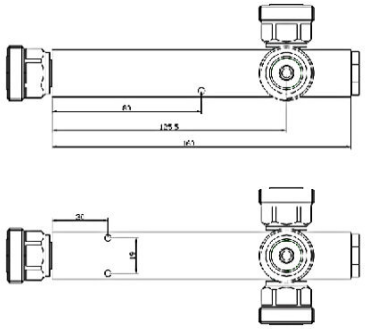

3W DIN Type

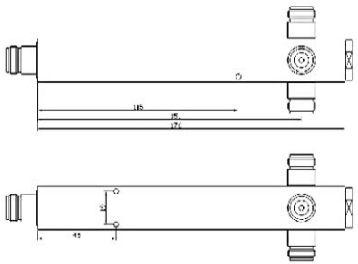

4W N Type

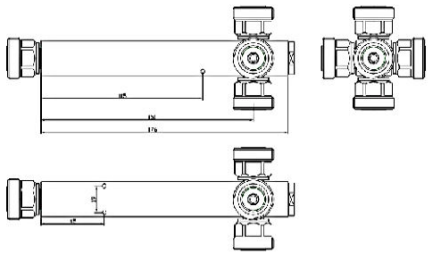

4W DIN Type

High power Splitter

700-2700MHz

Principal Parameters（主要指标）

Part Number	2 Way	3 Way	4 Way
	SH2-727-Nf	SH3-727-Nf	SH4-727-Nf
	SH2-727-Df	SH3-727-Df	SH4-727-Df
Frequency	698 – 2700 MHz	698 – 2700 MHz	698 – 2700 MHz
3rd Order IMD 2X43dBm	– 160dBc	– 160dBc	– 160dBc
Average Power, max	300 W	300 W	300 W
Impedance	50 ohm	50 ohm	50 ohm
Insertion Loss	0.2 dB	0.3 dB	0.3 dB
Input Return Loss	20.8 dB	20.8 dB	19 dB
Split Loss	3.0 dB	4.8 dB	6.0 dB
Environment	IP65	IP65	IP65
Work temp	-40-75C	-40-75C	-40-75C
Connector	N(f), DIN(f),	N(f), DIN(f),	N(f), DIN(f),

Configuration（外形）

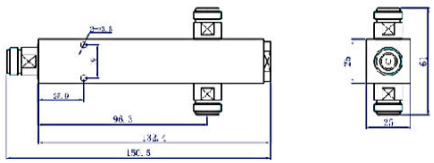

N type 2 Way Splitter

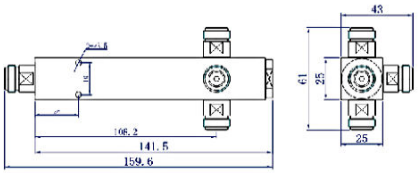

N type 3 Way Splitter

High power Splitter

380-2700MHz

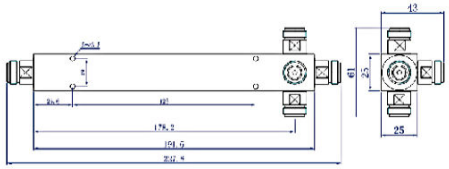

N type 4 Way Splitter

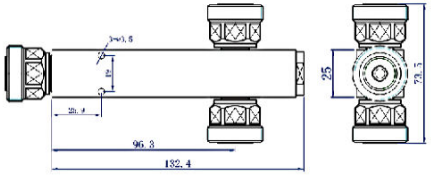

DIN type 2 Way Splitter

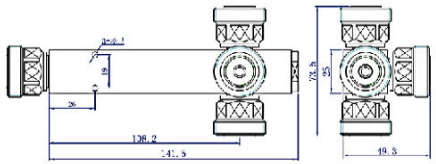

DIN type 3 Way Splitter

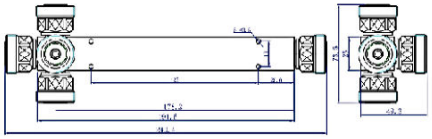

DIN type 4 Way Splitter

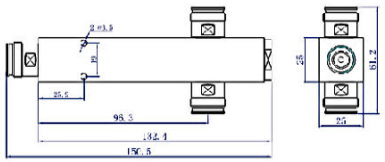

4310 type 2 Way Splitter

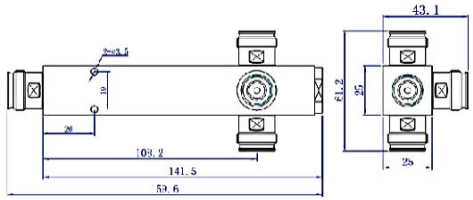

4310 type 3 Way Splitter

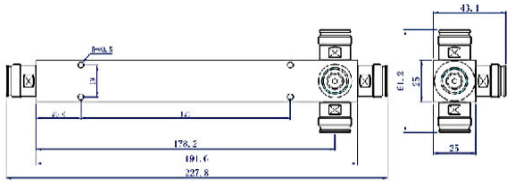

4310 type 4 Way Splitter

Low power Splitter

698-2700MHz

Principal Parameters（主要指标）

Part Number	2 Way	3 Way	4 Way
	SL2-727-Nf SL2-727-Mf	SL3-727-Nf SL3-727-Mf	SL4-727-Nf SL4-727-Mf
Frequency Band	698 – 2700 MHz	698 – 2700 MHz	698 – 2700 MHz
3rd Order IMD 2X43dBm	– 153dBc	– 153dBc	– 153dBc
Average Power, max	5W	5W	5 W
Impedance	50 ohm	50 ohm	50 ohm
Insertion Loss	0.4 dB	0.5 dB	0.6 dB
Return Loss	21 dB	20 dB	19 dB
Split Loss	3.0 dB	4.8 dB	6.0 dB
Isolation	20 dB	20 dB	19 dB
Environment	IP65	IP65	IP65
Work temp	-40-75C	-40-75C	-40-75C
Connector	N(f)	N(f)	N(f)

Low power Splitter

698-2700MHz

Configuration（外形）

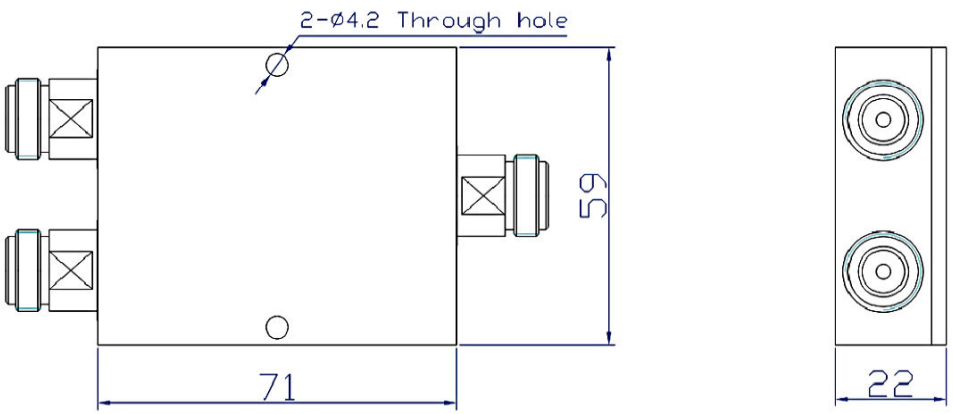

2 Way splitter

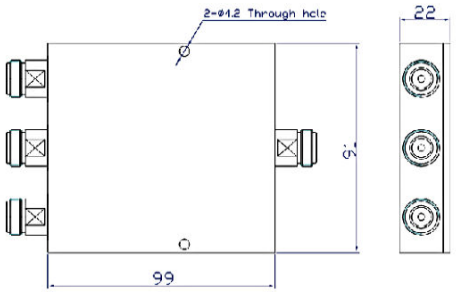

3 Way splitter

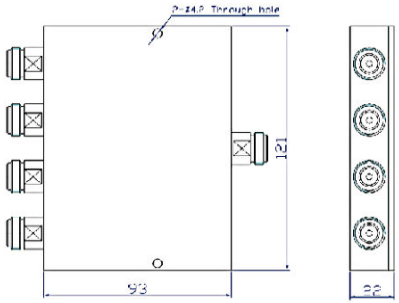

4 Way splitter

Attenuator系列

3 dB Attenuator

Principal Parameters (主要指标)

Item	Requirement	Remark
Operating Frequency	690– 2700 MHz	
3rd Order IMD 2X43dBm	-150dBc or – 160dBc	
Average Power	100 W	
Attenuation	3.1±0.6dB	SJ3-727-DmDf
	6±1dB	SJ6-727-DmDf
	10±1dB	SJ10-727-DmDf
	15±1dB	SJ15-727-DmDf
	20±1.5dB	SJ20-727-DmDf
	30±1.5dB	SJ30-727-DmDf
Impedance	50 ohm	
Return Loss	19dB	
Environment	IP65	
Work temp	-40-75℃	
Connector	N(f) / Din(f)/4.310(f)	

Configuration (外形)

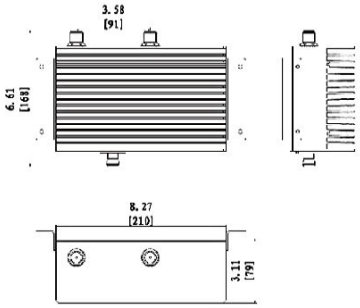

3dB Attenuator N type

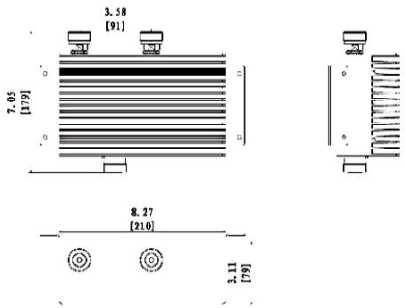

3dB Attenuator DIN type

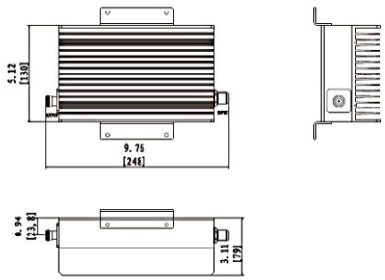

6-30dB atteunator N type

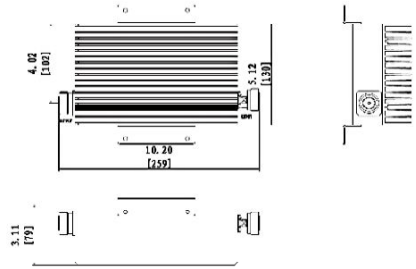

6-30dB atteunator DIN type

Low PIM 50 W Load

Low PIM 50W Load

Configuration (外形)

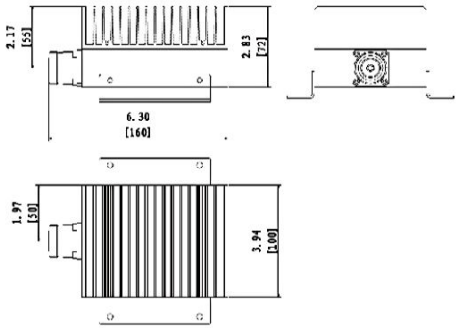

DIN 50W LOAD

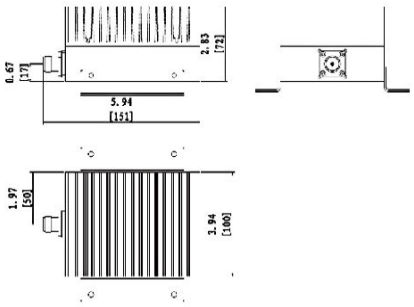

N 50W LOAD

Principal Parameters (主要指标)

Item	Requirement
Operating Frequency	698– 2700 MHz
3rd Order IMD 2X43dBm	– 160dBc
Average Power, maximum	50 W
Impedance	50 ohm
Return Loss, minimum	19 dB
Environment	IP65
Work temp	-40-75℃
Connector	DIN(f) /N(f)

Low PIM 100 W Load

Low PIM 100W Load

Configuration（外形）

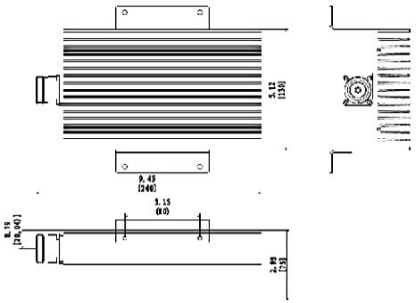

DIN 100W LOAD

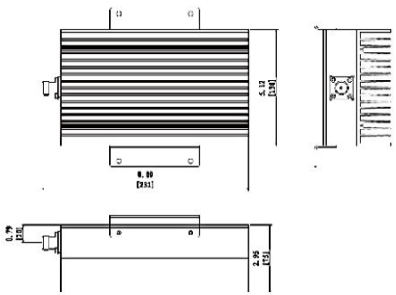

N 100W LOAD

Principal Parameters（主要指标）

Item	Requirement
Operating Frequency	698– 2700 MHz
3rd Order IMD 2X43dBm	– 160dBc
Average Power, maximum	100 W
Impedance	50 ohm
Return Loss, minimum	19 dB
Environment	IP65
Work temp	-40-75℃
Connector	DIN(f) /N(f)

扫二维码进入导航
苏州灿勤通讯技术有限公司